지시의 용접치수	지시의 모서리부분	지시의 일반치수 허용차 (KSB ISO 2768-1)									표면 거칠기 (KSB 0161 , 0507 , 0617)										
a	지시의 일반 모서리 제거 C = 0.3~0.8 R = 0.3~0.8	절삭 가공부	구 분	0.5 ~ 6	6 ~ 30	30 ~ 120	120 ~ 400	400 ~ 1000	1000 ~ 2000	2000 ~ 4000	Ra	0.1	0.2	0.4	0.8	1.6	3.2	6.3	12.5	25
											Rmax	0.4S	0.8S	1.6S	3.2S	6.3S	12.5S	25S	50S	100S
			중간급	±0.1	±0.2	±0.3	±0.5	±0.8	±1.2	±2.0	다듬질									

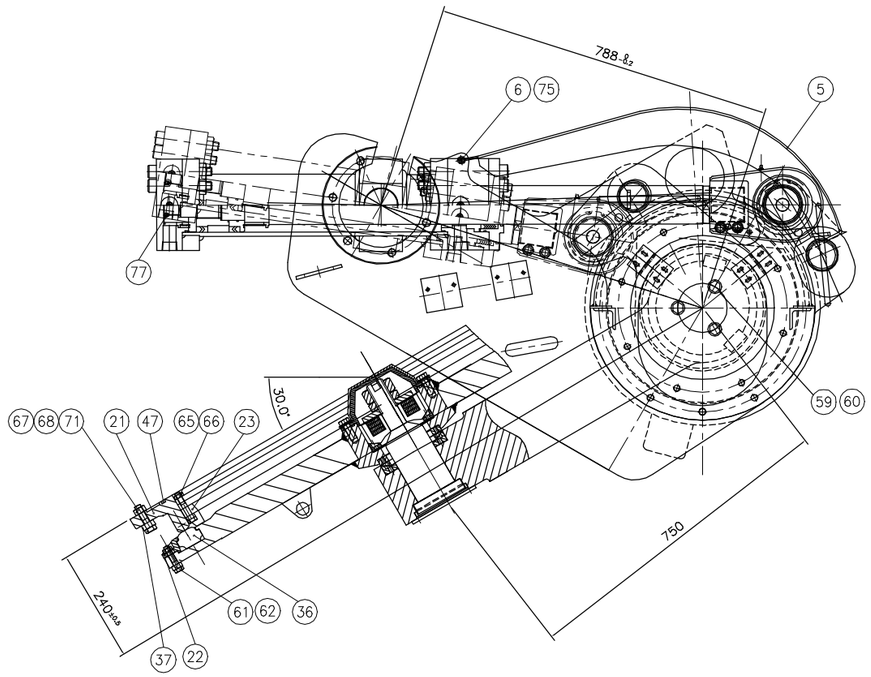

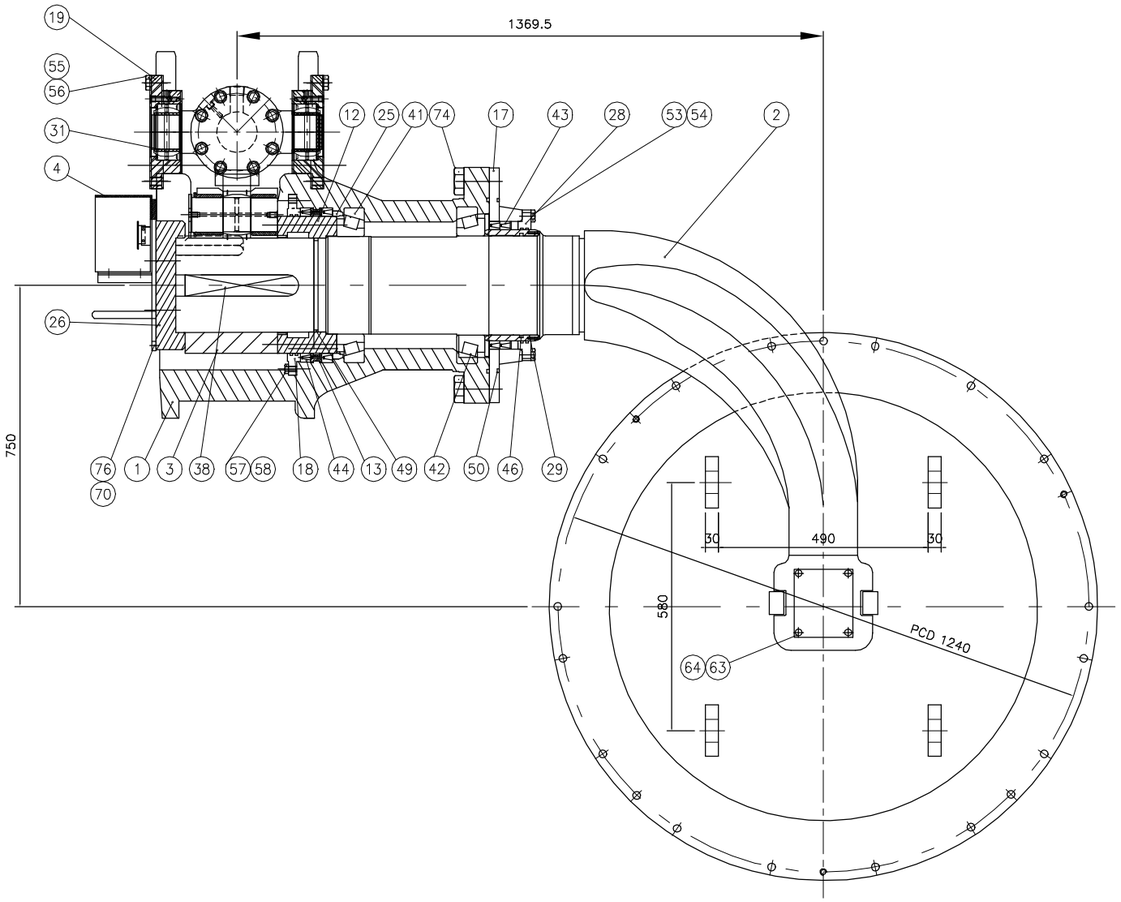

*. TOTAL WEIGHT : (2,880)X4SET=(11,520)Kg

NO.	DESCRIPTION	MAT.(KS)	UNIT	TOTAL	PERUNIT	TOTAL WEIGHT(kg)	REMARKS
77	HYDRAULIC CYLINDER		1			227	
76	HEX.BOLT	SCM440	4				
75	SPLIT PIN	MSWR10	2				
74	HEX. SOCKET HEAD BOLT	SCM440	4				
73	HEX.NUT	SCM440	1				
72	HEX.NUT	SCM440	1				
71	HEX.BOLT	SCM440	6				
70	SCHNORR WASHER	SM20C	6				
69	HEX.BOLT	SCM440	6				
68	HEX.NUT & PLAIN WASHER	SCM440	16				
67	T-BOLT	SM25C	16		0.3	4.8	
66	PLAIN WASHER 12	SS400	12				
65	HEX.BOLT & NUT	SM25C+ SM20C	12				
64	SCHNORR WASHER	SS400	4				
63	HEX.BOLT	SM25C	4				
62	SCHNORR WASHER	SS400	19				
61	HEX.BLOT & NUT	SM25C+ SM20C	19				
60	SCHHORR WASHER	SS400	3				
59	HEX.SOCKET BOLT	SCM440	3				
58	SCHNORR WASHER	SS400	8				

NO.	DESCRIPTION	MAT.(KS)	UNIT	TOTAL	PERUNIT	TOTAL WEIGHT(kg)	REMARKS
57	HEX.BOLT	SS400	8				
56	SCHNORR WASHER	SS400	12				
55	HEX.BOLT	SM25C	12				
54	SCHNORR WASHER	SS400	6				
53	HEX.BOLT	SM25C	6				
52	SCHNORR WASHER	SS400	8				
51	HEX.BOLT	SM25C	8				
50	O-RING (ø6.5 X ø391.6 X ø404.6)	N.B.R	1				
49	O-RING(ø7 X ø208.1 X ø222.1)	N.B.R	1				
48	O-RING (ø4.5 X ø174.7 X ø183.7)	N.B.R	1				
47	O-RING (ø8 X ø1120 X ø1136)	SILICON	1				
46	O-RING(ø7 X ø231.5 X ø245.5)	N.B.R	1				
45	BEARING		1				
44	U-PACKING (ø320 X ø360 X 25)	N.B.R	2				
43	U-PACKING (ø260 X ø300 X 25)	N.B.R	2				
42	TIMKEN BEARING		1				
41	TIMKEN BEARING		1				
40	SNAP RING(FOR HOLE)	STC5	2				
39	GASKET	NON-ASBESTOS	1				
38	KEY(ONE SIDE ROUND)	SM45C	2	2.1	4.2		
37	FIXATION	SS400	6	0.3	1.8		

NO.	DESCRIPTION	MAT.(KS)	UNIT	TOTAL	PERUNIT	TOTAL	REMARKS
36	SEAL FOR FLAP	SILICON	1			1.9	
35	COVER	SS400	1			2.8	
34	LOCKING NUT	SCP1	1			0.1	
33	WASHER	SS400	1			1.2	
32	SECURITY RIVOT	SM45C	1			7.6	
31	BUSH	CAC403	2		0.7	1.4	
30	BUSH	CAC403	4			1.1	
29	BUSHING	SCM440	1			10.2	
28	RING	SS400	1			8.3	
27	BEARING	CAC403	1			1.8	
26	END PLATE	SS400	1			31.3	
25	DISTANCE RING	SS400	1			2.2	
24	CLEVIS	SC450	1			–	
23	LOCKING RING	SS400	1			18.2	
22	LOCKING RING	SS400	1			18.8	
21	SEAL VALVE SEAT	SS400	1			137.2	
20	AXLE		1			–	
19	COUPLING FLANCE	SM45C	2		15.3	30.6	
18	LABYRINTH RING	SS400	1			13.6	
17	STUFFING BOX	SS400	1			43.8	

NO.	DESCRIPTION	MAT.(KS)	UNIT	TOTAL	PERUNIT	TOTAL	REMARKS
16	BEARING	CAC403	1			2.1	
15	COVER	SM45C	1			4.2	
14	DISC SPRING	SK5M	4		0.5	2	
13	LANTERN RING	SS400	1			3.4	
12	RING	SCM440	1			40.8	
11	BEARING	SM45C	1			3.8	
10	BEARING	SM45C	1			2.1	
09	PIN	SCM440	1			12.4	
08	VALVE BODY	SS400+ SM35C	1			522.9	
07	BUSH	CAC403	1			1.1	
06	PIN	SM45C	1			–	
05	SAFETY COVER	STS304	1			18.8	
04	SENCER BASE COVER	SS400	1			–	
03	LEVER		1			143.2	
02	LEVER ARM	SF540A	1			597	
01	CASING		1			820	
	LOWER VALVE ASS'Y		4		2743	10,972	

Item Name: USV_LSV
Model No.: FSP-FT-SV01-001

NO.	DATE	REVISION & DESCRIPTION	DRAWN	CHECKED	REVIEWED	APPROVED
3						
2						
1						
0	24.11.20	FOR REFERENCE	S.C.PARK	-	O.R.SONG	K.S.SONG

FINE (주)화인 INC

TITLE	22호 (G2R2) PLANT / FACILITY	HOPPER SYSTEM ASSEMBLY OF LOWER SEAL VALVE & UPPER SEAL VALVE			
FINE INC.	DRAWN	CHECKED	REVIEWED	APPROVED	
	S.C.PARK	-	O.R.SONG	K.S.SONG	
	24.11.20	-	24.11.20	24.11.20	

SCALE	1/7	PROJECTION	
SIZE	A3	DIMENSION	mm
REF. DWG. NO. ITEM MODEL NO.	FSP-FT-SV01-001		
MAKER DWG. NO.	214-M34-B2510 0		
DWG. NO.	-		