NO.	DATE	REVISION & DESCRIPTION	SIGNATURE CHECKED	SIGNATURE REVIEWED
3	-	-	-	-
1				
2				

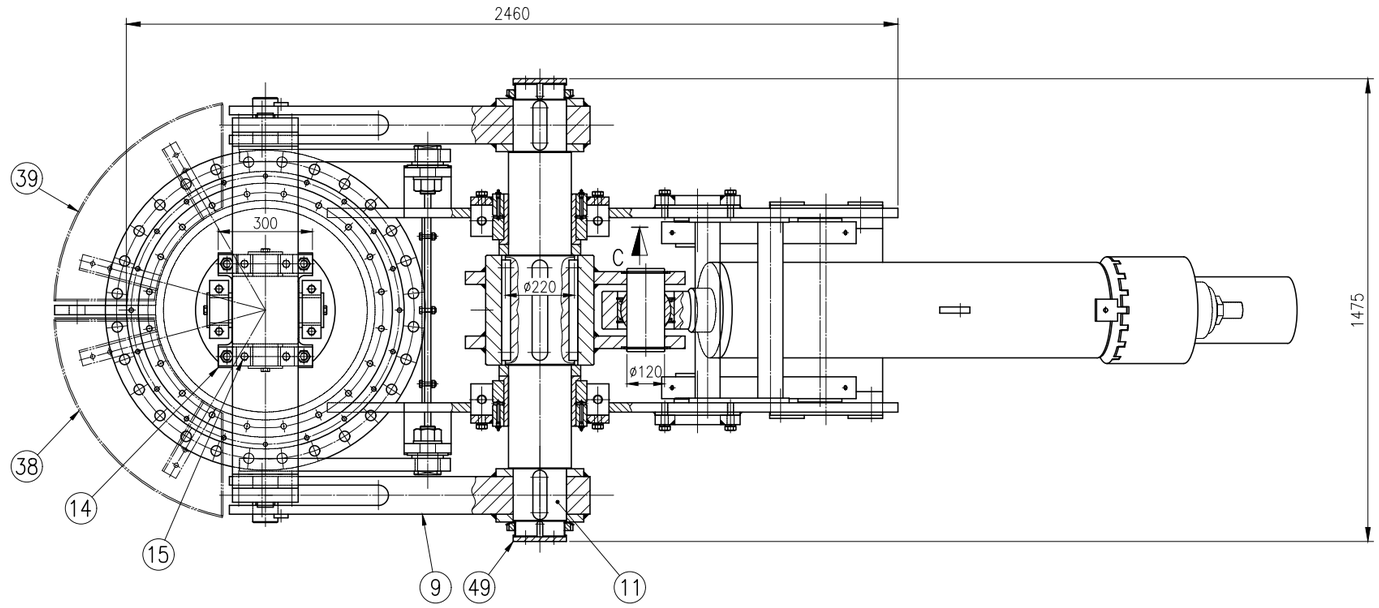

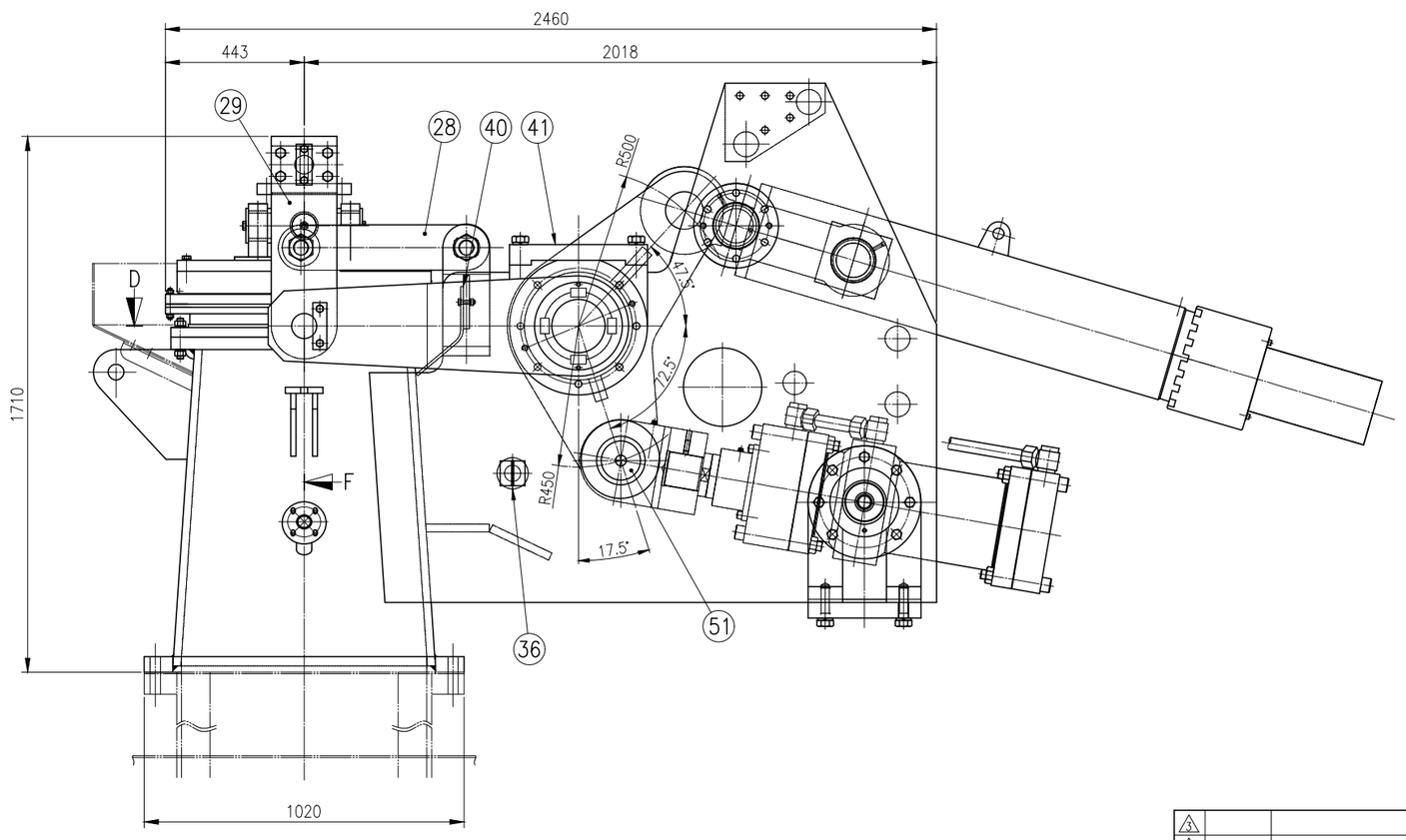

NOTES

1. Design Pressure : 6.0 BAR(g)
2. Operating Pressure : Nominal 4.5 BAR(g)
   Max-5.95 BAR(g) (기계적으로 최초 배출)
   Max-6.30 BAR(g) (최대 Gas량 배출)
3. Design Temperature : 200 °C
4. Process Temperature : 1100 °C

52	SPRING NEST ASS'Y		SET	1SET		-	
51	PIN		EA	1	-		
50	HYDRAULIC CYLINDER		SET	1SET		-	
49	END PLATE		EA	2	-	-	
48	SPACER		EA	2	-	-	
47	OILLESS BUSH		EA	4	-	-	
46	PIN		EA	2	-	-	
45	OILLESS BUSH		EA	2	-	-	
44	WASHER		EA	2	-	-	
43	OILLESS BUSH		EA	2	-	-	
42	SPACER		EA	4	-	-	
41	BLOCK COVER		EA	2	-	-	
40	COVER PLATE		EA	1	-		
39	PROTECTING COVER		EA	1	-		
38	PROTECTING COVER		EA	1	-		
37	COVER		EA	2	-	-	
36	SAFETY PIN		EA	1	-		
35	END PLATE		EA	2	-	-	
34	PIN		EA	2	-	-	
33	SPACER		EA	2	-	-	
32	PIN		EA	2	-	-	
31	KEEPER PLATE		EA	2	-	-	
30	PIN		EA	2	-	-	
29	TOP SIDE HINGE		EA	2	-	-	
28	HINGE		EA	2	-	-	
27	CLAMP WASHER		EA	4	-	-	
26	BUSH		EA	4	-	-	
25	BUSH		EA	2	-	-	
24	COVER		EA	2	-	-	
23	SPACER		EA	2	-	-	
22	BUSH		EA	2	-	-	
21	COVER		EA	2	-	-	
20	SUPPORT		EA	1	-		
19	CROSS KIT		EA	1	-		
18	ADJUSTING BOLT		EA	4	-	-	
17	END PLATE		EA	4	-	-	
16	SPACER		EA	4	-	-	
15	ADJUST BLOCK		EA	2	-	-	
14	TOP BLOCK COVER		EA	2	-	-	
13	TOP FRAME		EA	1	-		
12	SPRING NEST LINK		EA	2	-	-	
11	MAIN SHAFT		EA	1	-		
10	CENTER LINK		EA	1	-		
9	ARM		EA	2	-	-	
8	FRAME		EA	1	-		
7	UPPER SEAT		EA	1	-		
6	UPPER SEAT HOLDER		EA	1	-		
5	SEAL PACKING		EA	1	-		
4	SEAL CLAMP		EA	1	-		
3	SEAL HOLDER		EA	1	-		
2	VALVE SEAT		EA	1	-		
1	BOTTOM BODY		EA	1	-		
	BLEEDER VALVE ASSEMBLY			1SET		-	

NO.	DATE	REVISION & DESCRIPTION	CHECKED	REVIEWED
3				
2				
1				
0	21.10.26	FOR CONSTRUCTION	M.S.KANG	K.S.SONG

(주)화인 FINE INC

NO.	DESCRIPTION	MAT'(KS)	UNIT QUANTITY	TOTAL QUANTITY	PERUNIT WEIGHT(kg)	TOTAL WEIGHT(kg)	REMARK'S

SCALE	1/1	PROJECTION	
SIZE	A1	DIMENSION	mm

TITLE: # 고로 PLANT / 노정 FACILITY — RX.345A01 SAFETY VALVE GENERAL ASSEMBLY

FINE EQUIPMENT NO.: FSP-FT-FG01-000 0

FINE INC.	DRAWN	CHECKED	REVIEWED	APPROVED
	S.C.PARK	M.S.KANG	K.S.SONG	H.G.RYU
	25.07.03	25.07.03	25.07.03	25.07.03

FINE DWG. NO.

Item Name : Safety Valve

Model No. : FSP-FT-BV02-001